Wall-mountable Closet Housing with 8-fiber SC Duplex Panels
4 Panels
WCH-04P

(front)

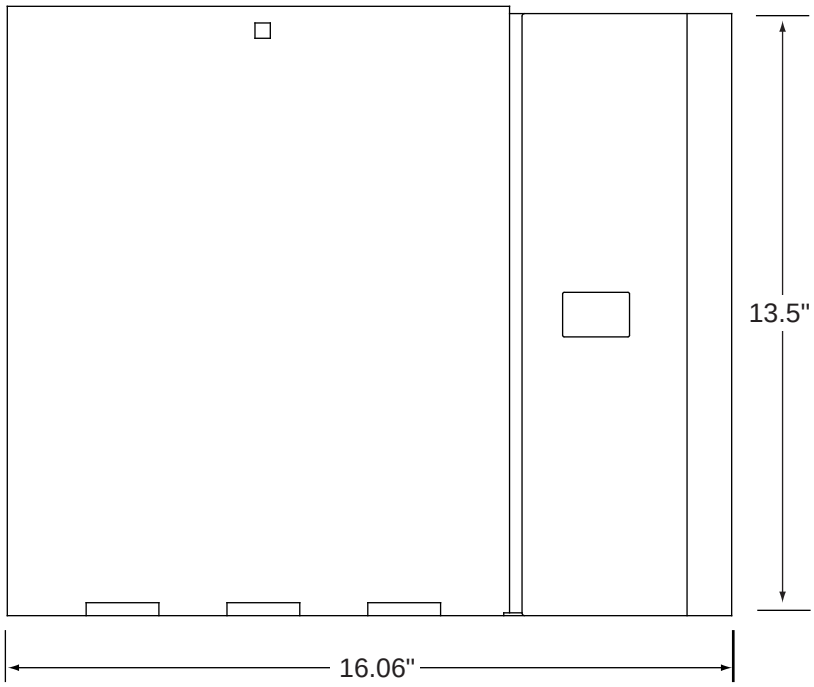

(r. side)

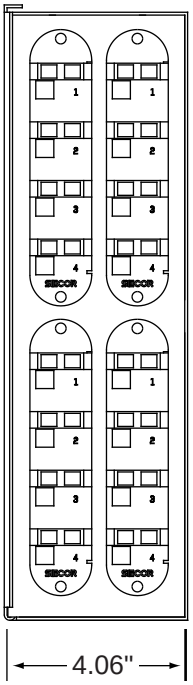

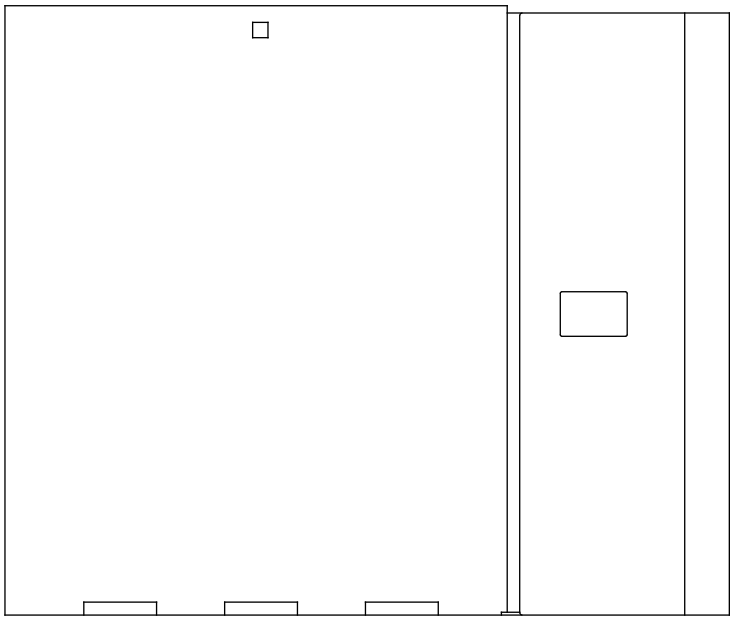

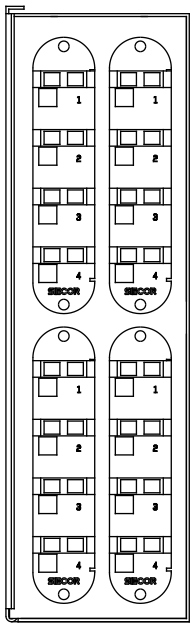

lu56-0006dp8
Jan. 1999

Wall-mountable Closet Housing with 8-fiber SC Duplex Panels
4 Panels
WCH-04P

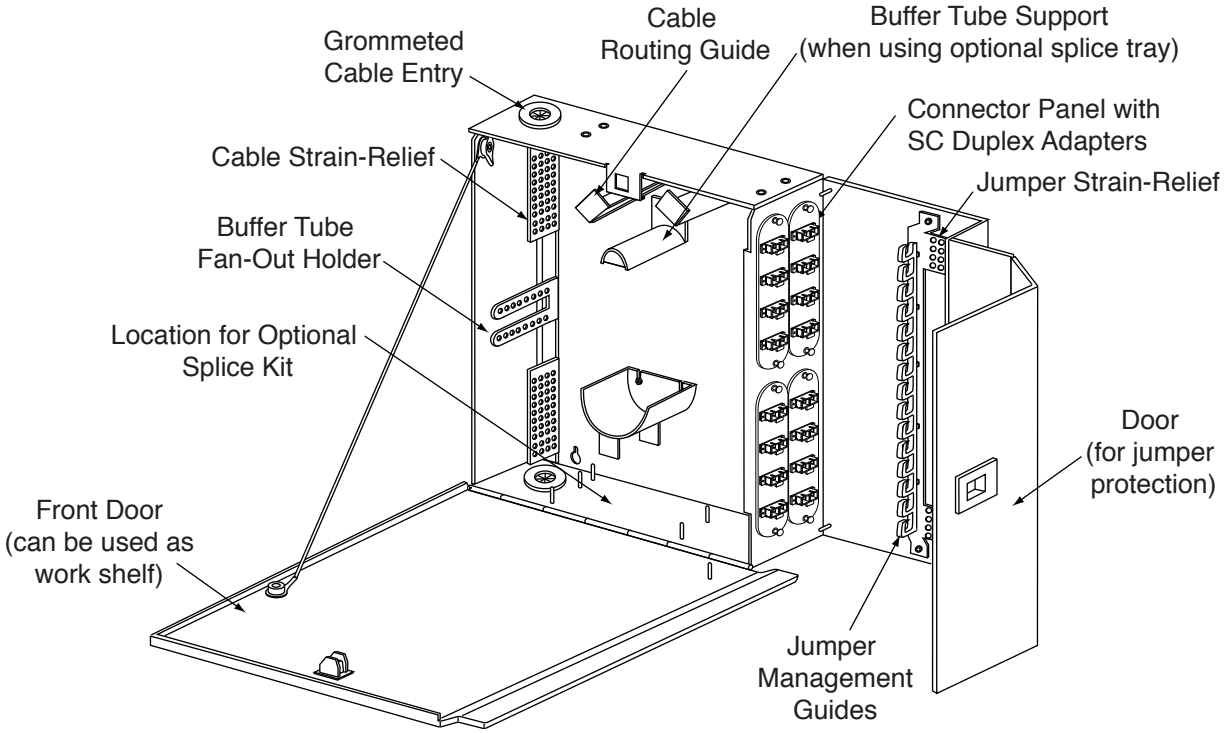

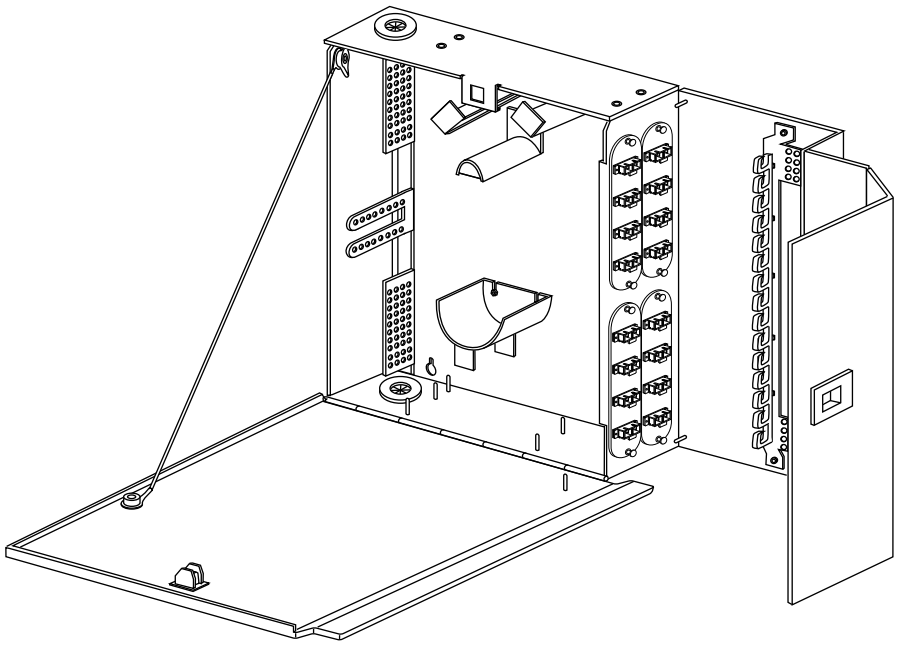

lu56-1006dp8
Sept. 2001